LED High Lumen, Low Profile High Bay Lights

100, 150 or 200 Watts – Dimmable – 120° Beam – 100~277VAC – 2700K to 5000K – UL

40 YEARS OF LED

FEATURES

- 5 Year LEDtronics Warranty
- High Lumen, High CRI, Low Glare
- Dimmable – Title 24 Compliant
- Energy Savings of 70% over Counterpart HIDs
- Lumen Maintenance over 70% @ 50,000+ Hours
- Die-cast Aluminum Heatsink, SMD LED Chips
- Weather & Acid/Alkaline Resistant Tempered Glass Lens
- Mean Well HBG Constant-Current Power Driver
- IP65: Suitable for High Humidity Sites
- No UV / No IR, Impact Resistant, Extra Lightweight
- UL/cUL Listed (E330342)
- No Toxic Metals – RoHS Compliant
- LED LM80 & LM79 Reports on File
- 12 inch Input & Dimming Wires

c UL us LISTED E330342

RoHS COMPLIANT

APPLICATIONS

Ideal for High Bay Lighting Applications:

- Factory Production Areas
- Industrial Plants, Workshop Areas
- Warehouses, Depots, Conference Halls
- Indoor Tennis & Basketball Courts

40 Years of LEDtronics Design, Engineering & Manufacturing Experience

100 Watts, Replaces HID up to 400W

120° BEAM ANGLE

100 Watts

HBL005-100W-XHW-101WD *(Halogen White)*
HBL005-100W-XIW-101WD *(Warm White)*
HBL005-100W-XNW-101WD *(Natural White)*
HBL005-100W-XPW-101WD *(Pure White)*

	XHW	XIW	XNW	XPW
Input Power	100 Watts	100 Watts	100 Watts	100 Watts
Input Voltage	100-277VAC *(Tested @ 120VAC)*			
Input Current	0.88A	0.88A	0.88A	0.88A
Total Lumens	13000 lm	13000 lm	13000 lm	13000 lm
Efficacy	130 lm/W	130 lm/W	130 lm/W	130 lm/W
Max. Candela	4787 cd	4787 cd	4787 cd	4787 cd
Power Factor	0.9	0.9	0.9	0.9
Color Temperature	2700K	3000K	4000K	5000K
Emitted Color	Halogen White	Warm White	Natural White	Pure White
CRI	81	81	81	81
Illumination Angle	120°	120°	120°	120°
Oper. Temperature	-22°F ~+122°F / -30°C ~+50°C			
Oper. Humidity	15%~90% RH			
Protection Rating	IP65 *(Water-Resistant to Low-Pressure Spray)*			
Dimmability	Continuous *(Can Dim down to ≤10% W)*			
Housing	Die-Cast Aluminum 1070 Alloy / Black			
Lens	Clear Tempered Glass			
Net Weight	6.63 lbs / 3.0 Kg			

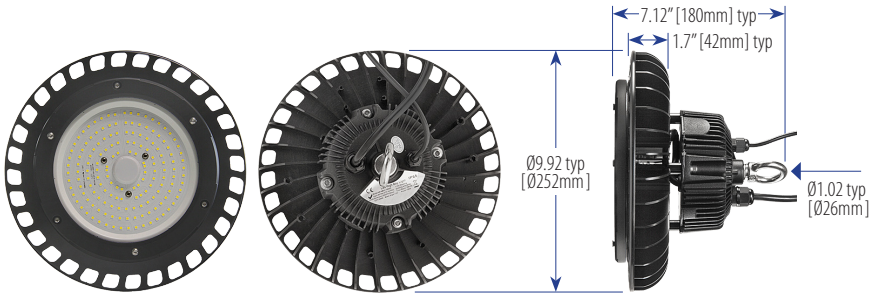

BOTTOM VIEW | TOP VIEW | SIDE VIEW

LEDTRONICS®
America's Premium Brand LED Company™

23105 Kashiwa Court, Torrance, CA 90505
Phone: (800) 579.4875 / (310) 534.1505
Fax: (310) 534.1424
E-mail: info@ledtronics.com
Website: ledtronics.com

ISO 9001:2015 CERTIFIED by DNV

© 2023 LEDtronics, Inc.

To order LEDtronics products, contact the Distributor or Sales Representative in your area.

Visit our website to find your local Distributor or Representative from our worldwide network:
LEDTRONICS.COM

LOG 655 / Rev 01 -2023

Check LEDTRONICS.COM for latest data. Printed material may be outdated

LED High Lumen, Low Profile, Dimmable High Bay Light: **150 Watts**

150 Watts, Replaces HID up to 600W

120° BEAM ANGLE

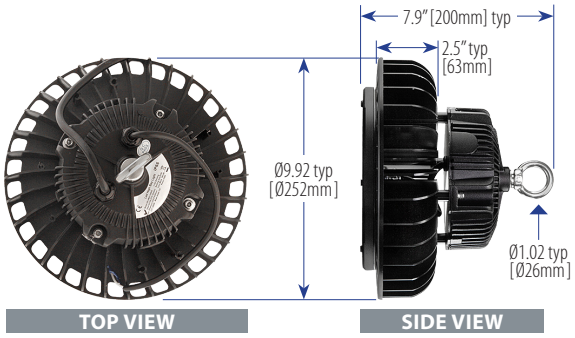

150 Watts

HBL005-150W-XHW-101WD *(Halogen White)*
HBL005-150W-XIW-101WD *(Warm White)*
HBL005-150W-XNW-101WD *(Natural White)*
HBL005-150W-XPW-101WD *(Pure White)*

	XHW	XIW	XNW	XPW
Input Power	150 Watts	150 Watts	150 Watts	150 Watts
Input Voltage		100-277VAC *(Tested @ 120VAC)*		
Input Current	1.28A	1.28A	1.28A	1.28A
Total Lumens	19500 lm	19500 lm	19500 lm	19500 lm
Efficacy	130 lm/W	130 lm/W	130 lm/W	130 lm/W
Max. Candela	7218 cd	7218 cd	7218 cd	7218 cd
Power Factor	0.9	0.9	0.9	0.9
Color Temperature	2700K	3000K	4000K	5000K
Emitted Color	Halogen White	Warm White	Natural White	Pure White
CRI	82	82	82	82
Illumination Angle	120°	120°	120°	120°
Oper. Temperature	-22°F ~+122°F / -30°C ~+50°C			
Oper. Humidity	15%~90% RH			
Protection Rating	IP65 *(Water-Resistant to Low-Pressure Spray)*			
Dimmability	Continuous *(Can Dim down to ≤10% W)*			
Housing	Die-Cast Aluminum 1070 Alloy / Black			
Lens	Clear Tempered Glass			
Net Weight	8.18 lb / 3.7 Kg			

c UL us LISTED E330342

RoHS COMPLIANT

PHOTOMETRIC REPORT: HBL005-150W-XPW-101WD

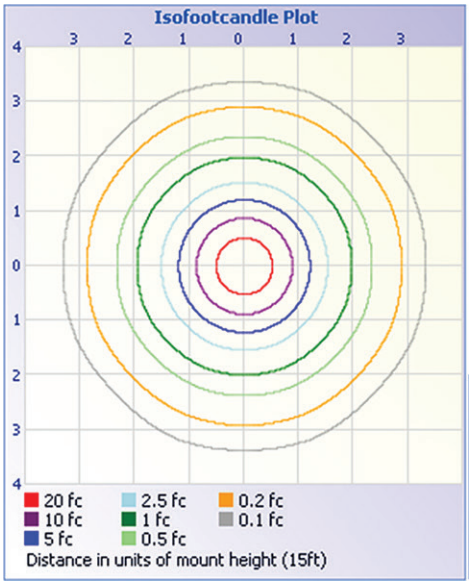

Filename: HBL005-150W-XPW-101WD
Manufacturer: LEDTRONICS
Luminaire: CLEAR LENS,152.4W,120VAC
Lamp Output: 1 lamp, rated Lumens/lamp: 19429.5
Max Candela: 7,218.0 at Horizontal: 22.5°, Vertical: 0°
Luminous Opening: Point
Test: 8-19-16
Photometry : Type C
CIE Class: Direct
Cutoff Class: Cutoff
Nema Type: 7 X 7

Illuminance at a Distance

	Center Beam fc	Beam Width	
3.0ft	801.9 fc	8.7 ft	8.6 ft
6.0ft	200.5 fc	17.5 ft	17.3 ft
9.0ft	89.1 fc	26.2 ft	25.9 ft
12.0ft	50.1 fc	34.9 ft	34.6 ft
15.0ft	32.1 fc	43.7 ft	43.2 ft

Vert. Spread: 111.0° Horiz. Spread: 110.5°

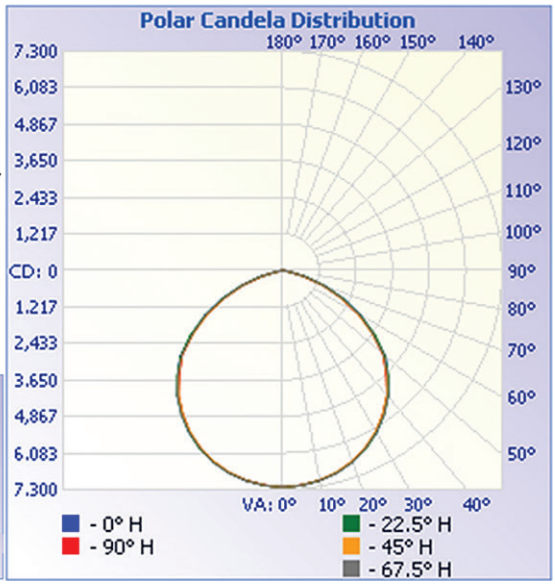

E-mail: info@ledtronics.com
Website: ledtronics.com

LEDTRONICS®
America's Premium Brand LED Company™

23105 Kashiwa Court, Torrance, CA 90505
Phone: (800) 579.4875 / (310) 534.1505
Fax: (310) 534.1424

WWW.LEDTRONICS.COM

LED High Lumen, Low Profile, Dimmable High Bay Light: **200 Watts**

200 Watts, Replaces HID up to 750W

120° BEAM ANGLE

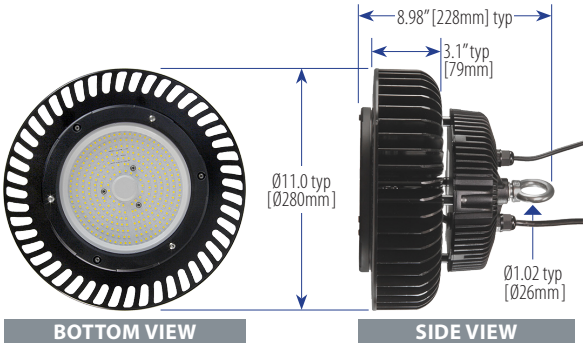

200 Watts

HBL005-200W-XHW-101WD *(Halogen White)*
HBL005-200W-XIW-101WD *(Warm White)*
HBL005-200W-XNW-101WD *(Natural White)*
HBL005-200W-XPW-101WD *(Pure White)*

	XHW	XIW	XNW	XPW
Input Power	200 Watts	200 Watts	200 Watts	200 Watts
Input Voltage	100-277VAC *(Tested @ 120VAC)*			
Input Current	1.67A	1.67A	1.67A	1.67A
Total Lumens	26000 lm	26000 lm	26000 lm	26000 lm
Efficacy	130 lm/W	130 lm/W	130 lm/W	130 lm/W
Max. Candela	8923 cd	8923 cd	8923 cd	8923 cd
Power Factor	0.9	0.9	0.9	0.9
Color Temperature	2700K	3000K	4000K	5000K
Emitted Color	Halogen White	Warm White	Natural White	Pure White
CRI	82	82	82	82
Illumination Angle	120°	120°	120°	120°
Oper. Temperature	-22°F ~+122°F / -30°C ~+50°C			
Oper. Humidity	15%~90% RH			
Protection Rating	IP65 *(Water-Resistant to Low-Pressure Spray)*			
Dimmability	Continuous *(Can Dim down to ≤10% W)*			
Housing	Die-Cast Aluminum 1070 Alloy / Black			
Lens	Clear Tempered Glass			
Net Weight	13.24 lbs / 6.0 Kg			

c UL us LISTED

RoHS COMPLIANT

E330342

PHOTOMETRIC REPORT: HBL005-200W-XPW-101WD

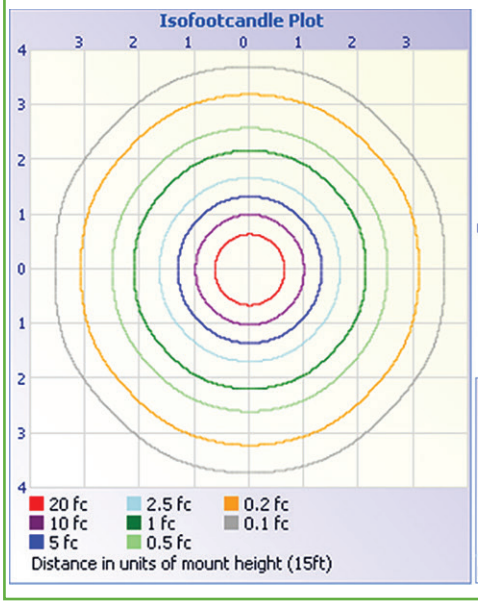

Filename: HBL005-200W-XPW-101WD
Manufacturer: LEDTRONICS
Luminaire: CLEAR LENS,199.4W,120VAC
Lamp Output: 1 lamp, rated Lumens/lamp: 25271.9
Max Candela: 8,923.0 at Horizontal: 45°, Vertical: 0°
Luminous Opening: Point
Test: 8-18-16
Photometry : Type C
CIE Class: Direct
Cutoff Class: Cutoff
Nema Type: 7 X 7

Illuminance at a Distance

	Center Beam fc	Beam Width	
3.0ft	989.2 fc	9.5 ft	8.9 ft
6.0ft	247.3 fc	19.1 ft	17.8 ft
9.0ft	109.9 fc	28.6 ft	26.8 ft
12.0ft	61.8 fc	38.2 ft	35.7 ft
15.0ft	39.6 fc	47.7 ft	44.6 ft

Vert. Spread: 115.7° Horiz. Spread: 112.1°

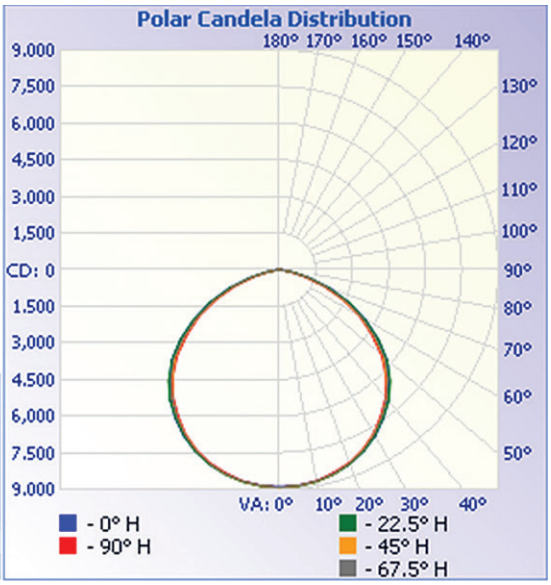

OPTIONAL ACCESSORIES

Available for Qualified Applications of HBL005 High Bay Luminaires

Mounting Bracket

Adjustable-Angle Support Bracket

Bracket adjusts 90° either way and straight down, in 18° increments.
(Installer provides their own code-compliant fasteners)

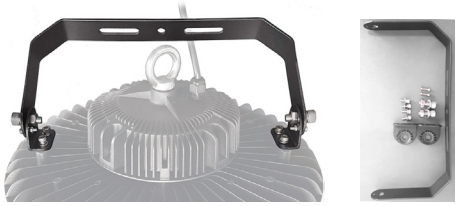

Part Number: HBL005-BRKT-001

Reflector Attachments

Narrows the light beam of HBL005

Only reflector is sold. Picture may differ slightly from actual product. Not shown to scale.

60°-Beam-Width Polycarbonate Reflector
22-inch diameter – Clear Transparent

Part Number:
HBL005-REFL-60D-PC

60°-Beam-Width Aluminum Reflector
13.5-inch diameter, 5.1-inch height

Part Number:
HBL005-REFL-60D

70°-Beam-Width Polycarbonate Reflector
16-inch diameter – Clear Transparent

Part Number:
HBL005-REFL-70D-PC

90°-Beam-Width Aluminum Reflector
14-inch diameter, 5.1-inch height

Part Number:
HBL005-REFL-90D

LEDTRONICS®
America's Premium Brand LED Company™

scmbdc®
Southern California
Minority Business Development Council

23105 Kashiwa Court, Torrance, CA 90505
Phone: (800) 579.4875 / (310) 534.1505
Fax: (310) 534.1424
E-mail: info@ledtronics.com
Website: ledtronics.com

© 2019 LEDtronics, Inc.